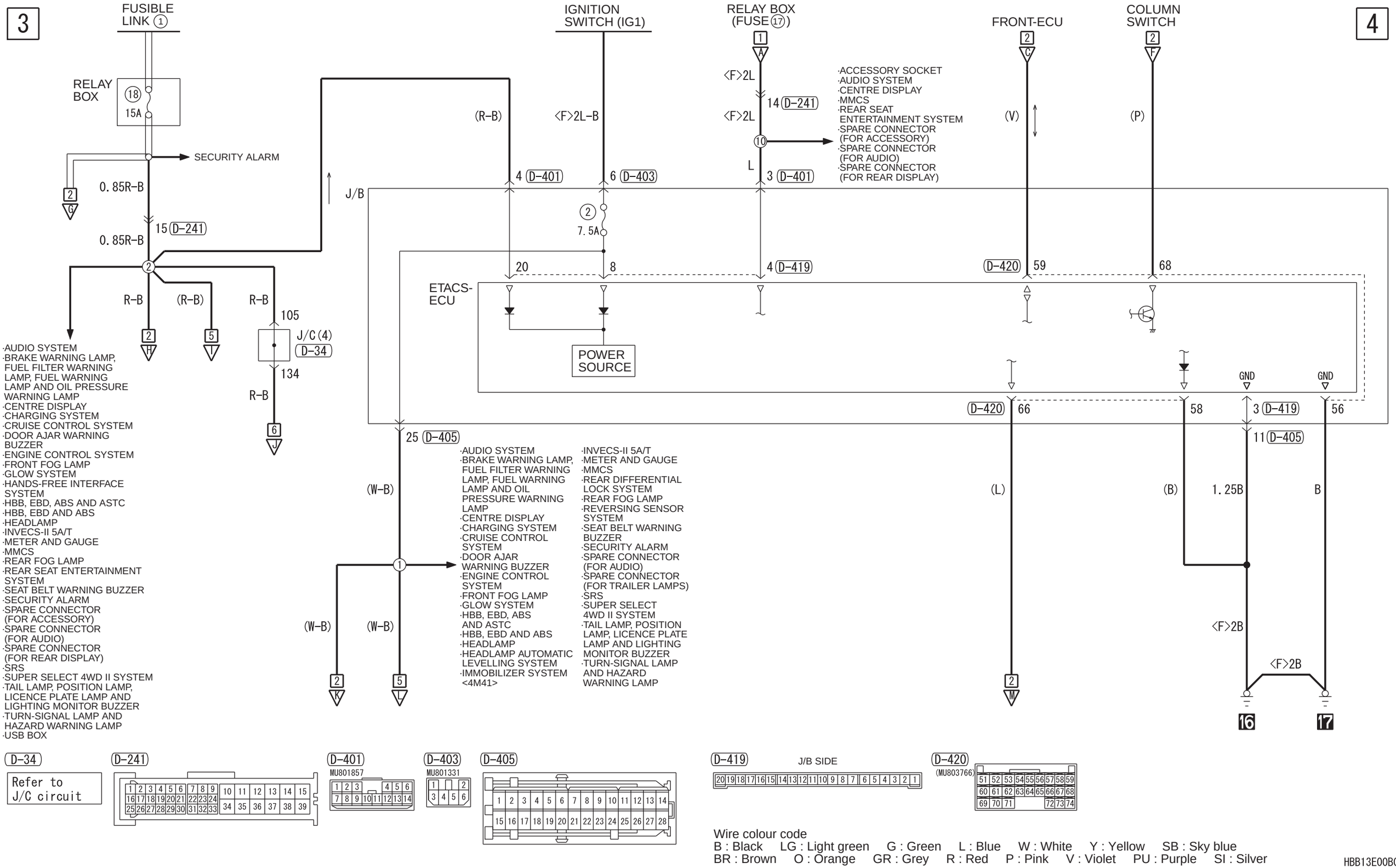
3
4
FUSIBLE LINK 1
RELAY BOX
18
15A
SECURITY ALARM
0.85R-B
15 D-241
0.85R-B
R-B
(R-B)
R-B
105
J/C (4)
D-34
134
R-B
·AUDIO SYSTEM
·BRAKE WARNING LAMP, FUEL FILTER WARNING LAMP, FUEL WARNING LAMP AND OIL PRESSURE WARNING LAMP
·CENTRE DISPLAY
·CHARGING SYSTEM
·CRUISE CONTROL SYSTEM
·DOOR AJAR WARNING BUZZER
·ENGINE CONTROL SYSTEM
·FRONT FOG LAMP
·GLOW SYSTEM
·HANDS-FREE INTERFACE SYSTEM
·HBB, EBD, ABS AND ASTC
·HBB, EBD AND ABS
·HEADLAMP
·INVECS-II 5A/T
·METER AND GAUGE
·MMCS
·REAR FOG LAMP
·REAR SEAT ENTERTAINMENT SYSTEM
·SEAT BELT WARNING BUZZER
·SECURITY ALARM
·SPARE CONNECTOR (FOR ACCESSORY)
·SPARE CONNECTOR (FOR AUDIO)
·SPARE CONNECTOR (FOR REAR DISPLAY)
·SRS
·SUPER SELECT 4WD II SYSTEM
·TAIL LAMP, POSITION LAMP, LICENCE PLATE LAMP AND LIGHTING MONITOR BUZZER
·TURN-SIGNAL LAMP AND HAZARD WARNING LAMP
·USB BOX
IGNITION SWITCH (IG1)
(R-B)
<F>2L-B
4 D-401
6 D-403
J/B
7.5A
20
8
ETACS-ECU
POWER SOURCE
25 D-405
(W-B)
(W-B)
(W-B)
·AUDIO SYSTEM
·BRAKE WARNING LAMP, FUEL FILTER WARNING LAMP, FUEL WARNING LAMP AND OIL PRESSURE WARNING LAMP
·CENTRE DISPLAY
·CHARGING SYSTEM
·CRUISE CONTROL SYSTEM
·DOOR AJAR WARNING BUZZER
·ENGINE CONTROL SYSTEM
·FRONT FOG LAMP
·GLOW SYSTEM
·HBB, EBD, ABS AND ASTC
·HBB, EBD AND ABS
·HEADLAMP
·HEADLAMP AUTOMATIC LEVELLING SYSTEM
·IMMOBILIZER SYSTEM <4M41>
·INVECS-II 5A/T
·METER AND GAUGE
·MMCS
·REAR DIFFERENTIAL LOCK SYSTEM
·REAR FOG LAMP
·REVERSING SENSOR SYSTEM
·SEAT BELT WARNING BUZZER
·SECURITY ALARM
·SPARE CONNECTOR (FOR AUDIO)
·SPARE CONNECTOR (FOR TRAILER LAMPS)
·SRS
·SUPER SELECT 4WD II SYSTEM
·TAIL LAMP, POSITION LAMP, LICENCE PLATE LAMP AND LIGHTING MONITOR BUZZER
·TURN-SIGNAL LAMP AND HAZARD WARNING LAMP
RELAY BOX (FUSE 17)
<F>2L
14 D-241
<F>2L
L
3 D-401
4 D-419
·ACCESSORY SOCKET
·AUDIO SYSTEM
·CENTRE DISPLAY
·MMCS
·REAR SEAT ENTERTAINMENT SYSTEM
·SPARE CONNECTOR (FOR ACCESSORY)
·SPARE CONNECTOR (FOR AUDIO)
·SPARE CONNECTOR (FOR REAR DISPLAY)
FRONT-ECU
(V)
D-420
59
COLUMN SWITCH
(P)
68
GND
GND
D-420
66
58
3 D-419
56
11 D-405
(L)
(B)
1.25B
B
<F>2B
<F>2B
16
17
D-34
Refer to J/C circuit
D-241
D-401
MU801857
D-403
MU801331
D-405
D-419
J/B SIDE
D-420
(MU803766)
Wire colour code
B : Black LG : Light green G : Green L : Blue W : White Y : Yellow SB : Sky blue
BR : Brown O : Orange GR : Grey R : Red P : Pink V : Violet PU : Purple SI : Silver
HBB13E00BC