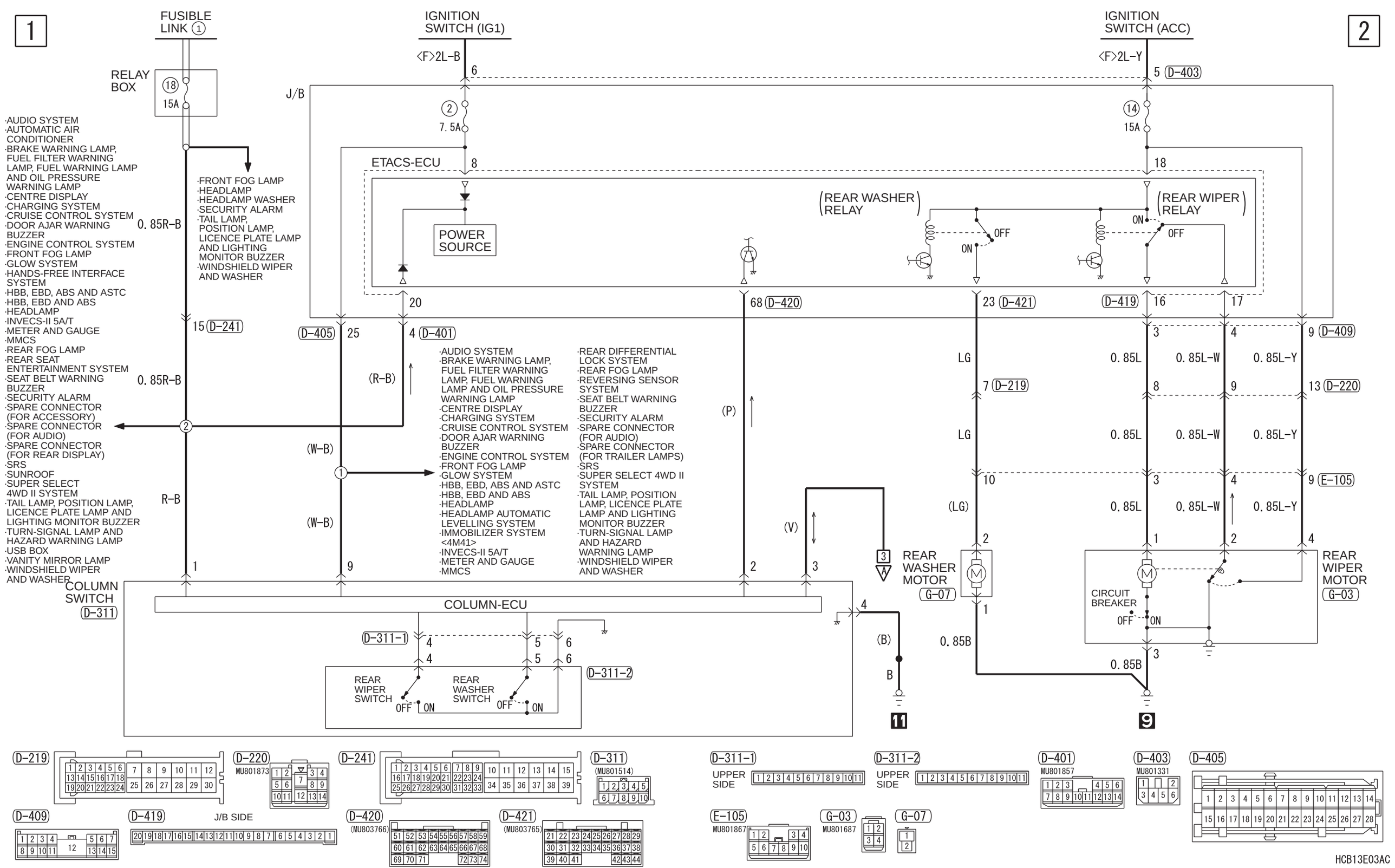
1
2
FUSIBLE LINK 1
IGNITION SWITCH (IG1)
IGNITION SWITCH (ACC)
<F>2L-B
<F>2L-Y
RELAY BOX
18
15A
J/B
2
7.5A
14
15A
ETACS-ECU
POWER SOURCE
REAR WASHER RELAY
REAR WIPER RELAY
ON
OFF
·AUDIO SYSTEM
·AUTOMATIC AIR CONDITIONER
·BRAKE WARNING LAMP, FUEL FILTER WARNING LAMP, FUEL WARNING LAMP AND OIL PRESSURE WARNING LAMP
·CENTRE DISPLAY
·CHARGING SYSTEM
·CRUISE CONTROL SYSTEM
·DOOR AJAR WARNING BUZZER
·ENGINE CONTROL SYSTEM
·FRONT FOG LAMP
·GLOW SYSTEM
·HANDS-FREE INTERFACE SYSTEM
·HBB, EBD, ABS AND ASTC
·HBB, EBD AND ABS
·HEADLAMP
·INVECS-II 5A/T
·METER AND GAUGE
·MMCS
·REAR FOG LAMP
·REAR SEAT ENTERTAINMENT SYSTEM
·SEAT BELT WARNING BUZZER
·SECURITY ALARM
·SPARE CONNECTOR (FOR ACCESSORY)
·SPARE CONNECTOR (FOR AUDIO)
·SPARE CONNECTOR (FOR REAR DISPLAY)
·SRS
·SUNROOF
·SUPER SELECT 4WD II SYSTEM
·TAIL LAMP, POSITION LAMP, LICENCE PLATE LAMP AND LIGHTING MONITOR BUZZER
·TURN-SIGNAL LAMP AND HAZARD WARNING LAMP
·USB BOX
·VANITY MIRROR LAMP
·WINDSHIELD WIPER AND WASHER
·FRONT FOG LAMP
·HEADLAMP
·HEADLAMP WASHER
·SECURITY ALARM
·TAIL LAMP, POSITION LAMP, LICENCE PLATE LAMP AND LIGHTING MONITOR BUZZER
·WINDSHIELD WIPER AND WASHER
0.85R-B
15 D-241
D-405
25
4 D-401
68 D-420
23 D-421
D-419
16
17
3
4
9 D-409
LG
0.85L
0.85L-W
0.85L-Y
7 D-219
8
9
13 D-220
(R-B)
(P)
(W-B)
R-B
·AUDIO SYSTEM
·BRAKE WARNING LAMP, FUEL FILTER WARNING LAMP, FUEL WARNING LAMP AND OIL PRESSURE WARNING LAMP
·CENTRE DISPLAY
·CHARGING SYSTEM
·CRUISE CONTROL SYSTEM
·DOOR AJAR WARNING BUZZER
·ENGINE CONTROL SYSTEM
·FRONT FOG LAMP
·GLOW SYSTEM
·HBB, EBD, ABS AND ASTC
·HBB, EBD AND ABS
·HEADLAMP
·HEADLAMP AUTOMATIC LEVELLING SYSTEM
·IMMOBILIZER SYSTEM <4M41>
·INVECS-II 5A/T
·METER AND GAUGE
·MMCS
·REAR DIFFERENTIAL LOCK SYSTEM
·REAR FOG LAMP
·REVERSING SENSOR SYSTEM
·SEAT BELT WARNING BUZZER
·SECURITY ALARM
·SPARE CONNECTOR (FOR AUDIO)
·SPARE CONNECTOR (FOR TRAILER LAMPS)
·SRS
·SUPER SELECT 4WD II SYSTEM
·TAIL LAMP, POSITION LAMP, LICENCE PLATE LAMP AND LIGHTING MONITOR BUZZER
·TURN-SIGNAL LAMP AND HAZARD WARNING LAMP
·WINDSHIELD WIPER AND WASHER
10
9 E-105
(LG)
(V)
REAR WASHER MOTOR
G-07
REAR WIPER MOTOR
G-03
CIRCUIT BREAKER
COLUMN SWITCH
D-311
COLUMN-ECU
D-311-1
D-311-2
REAR WIPER SWITCH
REAR WASHER SWITCH
(B)
B
0.85B
11
9
D-219
D-220
MU801873
D-241
D-311
(MU801514)
D-311-1
UPPER SIDE
D-311-2
UPPER SIDE
D-401
MU801857
D-403
MU801331
D-405
D-409
D-419
J/B SIDE
D-420
(MU803766)
D-421
(MU803765)
E-105
MU801867
G-03
MU801687
G-07
HCB13E03AC