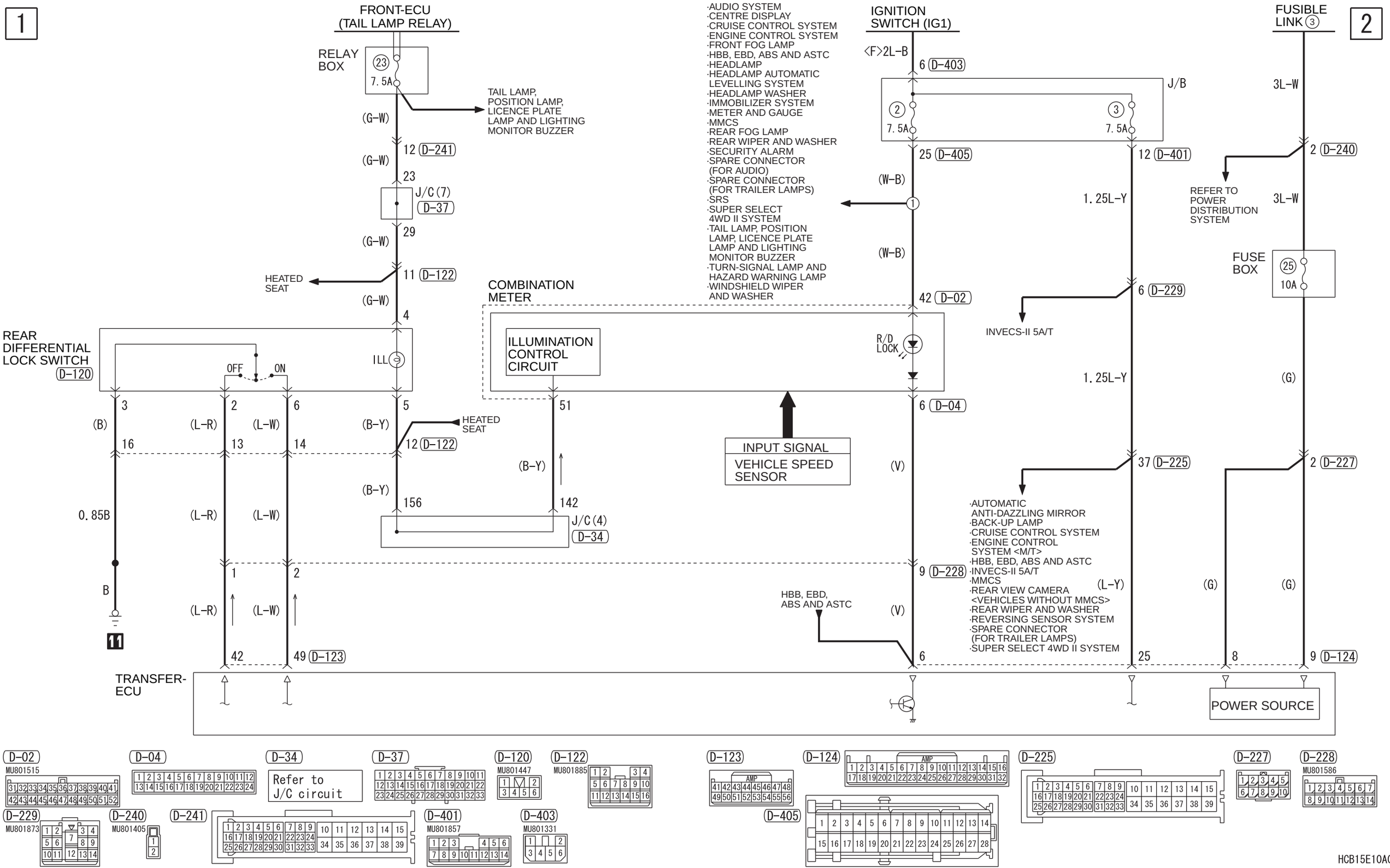
1
2
FRONT-ECU
(TAIL LAMP RELAY)
RELAY BOX
23
7.5A
TAIL LAMP, POSITION LAMP, LICENCE PLATE LAMP AND LIGHTING MONITOR BUZZER
(G-W)
12 D-241
23
J/C (7)
D-37
29
11 D-122
HEATED SEAT
4
REAR DIFFERENTIAL LOCK SWITCH
D-120
OFF
ON
ILL
3
2
6
5
(B)
(L-R)
(L-W)
(B-Y)
16
13
14
12 D-122
0.85B
B
11
1
2
42
49 D-123
TRANSFER-ECU
COMBINATION METER
ILLUMINATION CONTROL CIRCUIT
51
156
142
J/C (4)
D-34
INPUT SIGNAL
VEHICLE SPEED SENSOR
·AUDIO SYSTEM
·CENTRE DISPLAY
·CRUISE CONTROL SYSTEM
·ENGINE CONTROL SYSTEM
·FRONT FOG LAMP
·HBB, EBD, ABS AND ASTC
·HEADLAMP
·HEADLAMP AUTOMATIC LEVELLING SYSTEM
·HEADLAMP WASHER
·IMMOBILIZER SYSTEM
·METER AND GAUGE
·MMCS
·REAR FOG LAMP
·REAR WIPER AND WASHER
·SECURITY ALARM
·SPARE CONNECTOR (FOR AUDIO)
·SPARE CONNECTOR (FOR TRAILER LAMPS)
·SRS
·SUPER SELECT 4WD II SYSTEM
·TAIL LAMP, POSITION LAMP, LICENCE PLATE LAMP AND LIGHTING MONITOR BUZZER
·TURN-SIGNAL LAMP AND HAZARD WARNING LAMP
·WINDSHIELD WIPER AND WASHER
IGNITION SWITCH (IG1)
<F>2L-B
6 D-403
J/B
7.5A
7.5A
25 D-405
12 D-401
(W-B)
1.25L-Y
42 D-02
R/D LOCK
6 D-229
INVECS-II 5A/T
6 D-04
(V)
37 D-225
·AUTOMATIC ANTI-DAZZLING MIRROR
·BACK-UP LAMP
·CRUISE CONTROL SYSTEM
·ENGINE CONTROL SYSTEM <M/T>
·HBB, EBD, ABS AND ASTC
·INVECS-II 5A/T
·MMCS
·REAR VIEW CAMERA <VEHICLES WITHOUT MMCS>
·REAR WIPER AND WASHER
·REVERSING SENSOR SYSTEM
·SPARE CONNECTOR (FOR TRAILER LAMPS)
·SUPER SELECT 4WD II SYSTEM
9 D-228
(L-Y)
HBB, EBD, ABS AND ASTC
6
25
POWER SOURCE
FUSIBLE LINK 3
3L-W
2 D-240
REFER TO POWER DISTRIBUTION SYSTEM
FUSE BOX
25
10A
(G)
2 D-227
8
9 D-124
D-02
MU801515
D-04
D-34
Refer to J/C circuit
D-37
D-120
MU801447
D-122
MU801885
D-123
AMP
D-124
AMP
D-225
D-227
D-228
MU801586
D-229
MU801873
D-240
MU801405
D-241
D-401
MU801857
D-403
MU801331
D-405
HCB15E10AC