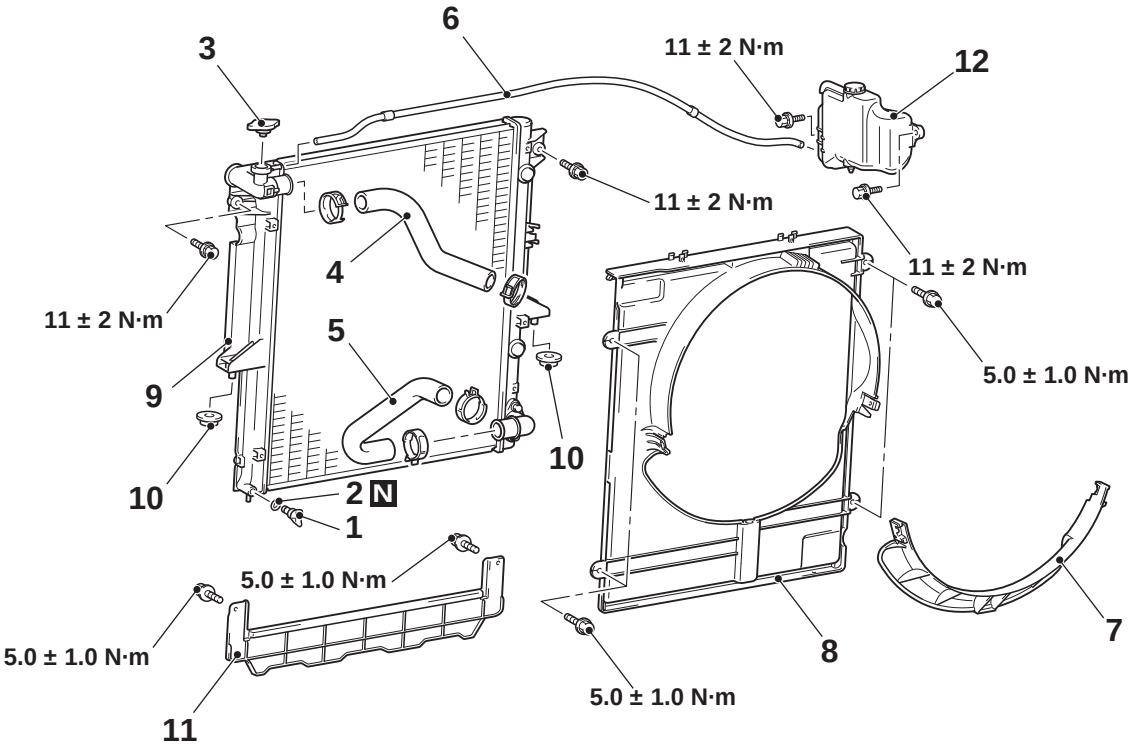
3
6
11 ± 2 N·m
12
11 ± 2 N·m
11 ± 2 N·m
4
11 ± 2 N·m
5
5.0 ± 1.0 N·m
9
10
10
2 N
1
5.0 ± 1.0 N·m
5.0 ± 1.0 N·m
8
7
5.0 ± 1.0 N·m
11
AC611568AC