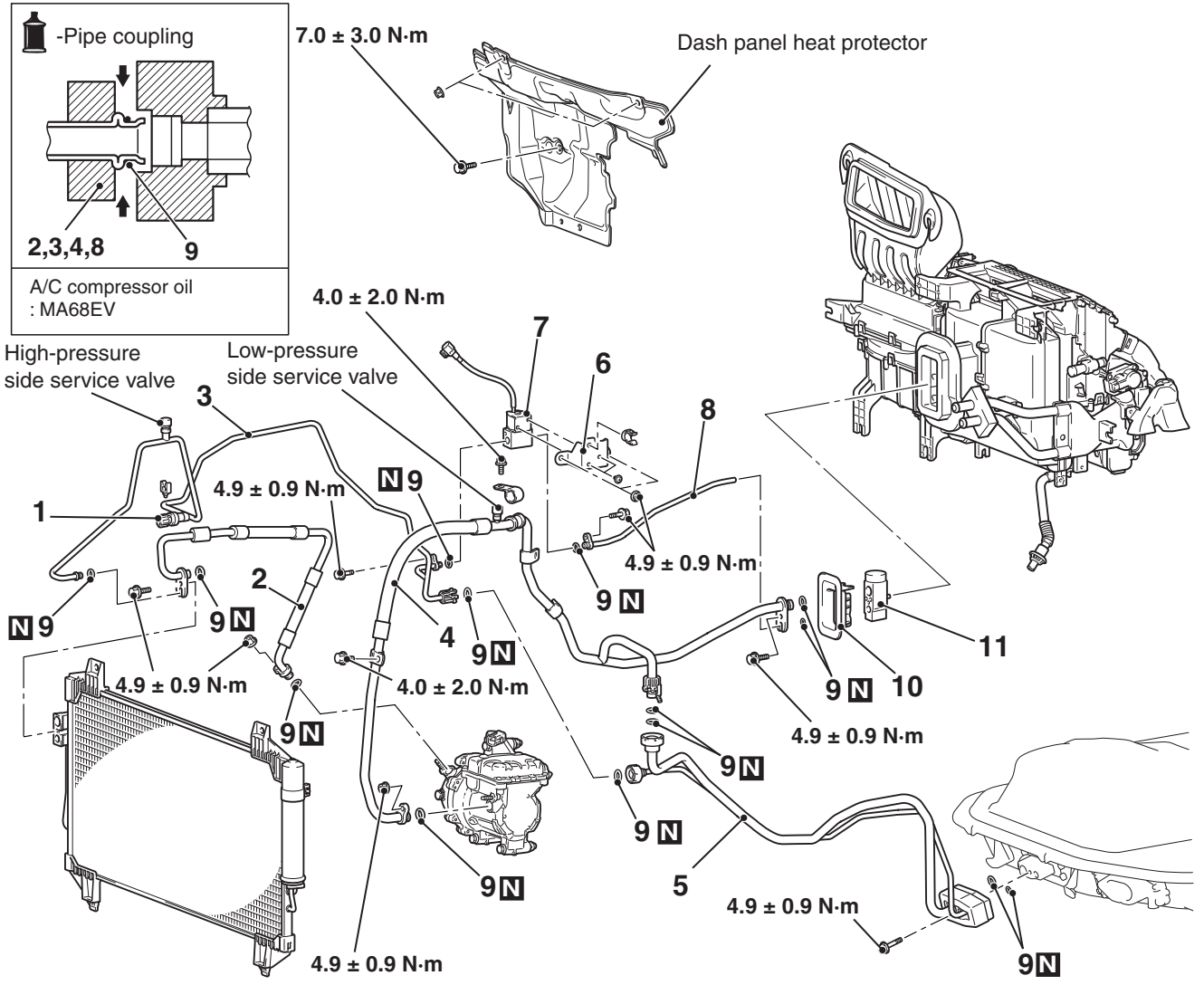
-Pipe coupling
2,3,4,8
9
A/C compressor oil
: MA68EV
7.0 ± 3.0 N·m
Dash panel heat protector
4.0 ± 2.0 N·m
7
6
High-pressure
side service valve
Low-pressure
side service valve
3
8
1
4.9 ± 0.9 N·m
N 9
2
4
9 N
4.9 ± 0.9 N·m
4.0 ± 2.0 N·m
11
10
5
ACC07380AB